B-SERIES

PARTS COUNTERMAN'S CATALOG

Section 2
Body (Exterior Components)

WHAT YOU WILL FIND IN THIS SECTION…

Decals
Fenders
Hose Supports
Paint Info
Splash Shields
Steps
Tool Boxes
Tube Racks

PAINTED PARTS

This bulletin is being released as a reminder that fabricated parts and some purchased parts, such as hydraulic cylinders, are shelved with in bare metal (in a few cases they are primered). In the production of our machines these parts are not painted until after the unit or sub section is assembled (boom, debris tank, power deck, etc.). When ordering these types of parts, you must specify if you want the part painted. There is an additional charge for painting to cover labor and materials. Bear in mind that the acrylic urethane paint we use, depending on grade and color, can cost anywhere from $125.00 to upwards of $300.00 a gallon.

If you require a part to be painted, we will need to know the color code of the paint. Color codes can be found on the Unit ID label on the equipment or on the Unit ID sheet in the owners manual. If this information is unavailable, call our customer service department with the model and serial number and we will look it up for you. Please note that this information may not be available on pre-Hi-Vac built units. For your convenience our more common colors are listed below.

DESCRIPTION	OLD CODE	CURRENT CODE
Gloss Black	GC-1738PS	G2-B1738P
New Gloss Black		LV5-5072436A
Hi-Vac Dark Blue	GC-HV107	G2-HV107
Light Grabber Blue	GC-58489	G2-58489
Signal Green	GC-58231	G2-58231-C
Omaha (Safety) Orange	N0789EA (Dupont)	
Fire Engine (Safety) Red		G2-48556
Seminole Red Metalic		G2-60281
Volvo Red	GC-51801	G2-51801
Hi-Vac White	GC-HV102	
Mack White	GC-60205	G2-60205
Sterling White	13698299-0	
Winter (Navistar) White	GC-40685	G2-40685-A
New Winter White		LV5-5070956A
Hi-Vac Yellow	GC-HV100C	G2-51695-C
School Bus (Safety) Yellow	GC-63388	G2-63388
Yellow	GC-59029	G2-59029

We also would like to remind everyone that we cannot ship paint as it is classified as a hazardous material. If you need purchase paint, your best course of action is to go to a local automotive paint supplier with the color code information.

B-SERIES LABEL SET

Stick-on labels are not sold individually - the one exception being the large (p/n A224000) Aquatech logo that goes on the side of the boom. The label sets are available in English and Spanish. The English label set is part number A224002, the Spanish set is part number A224004.

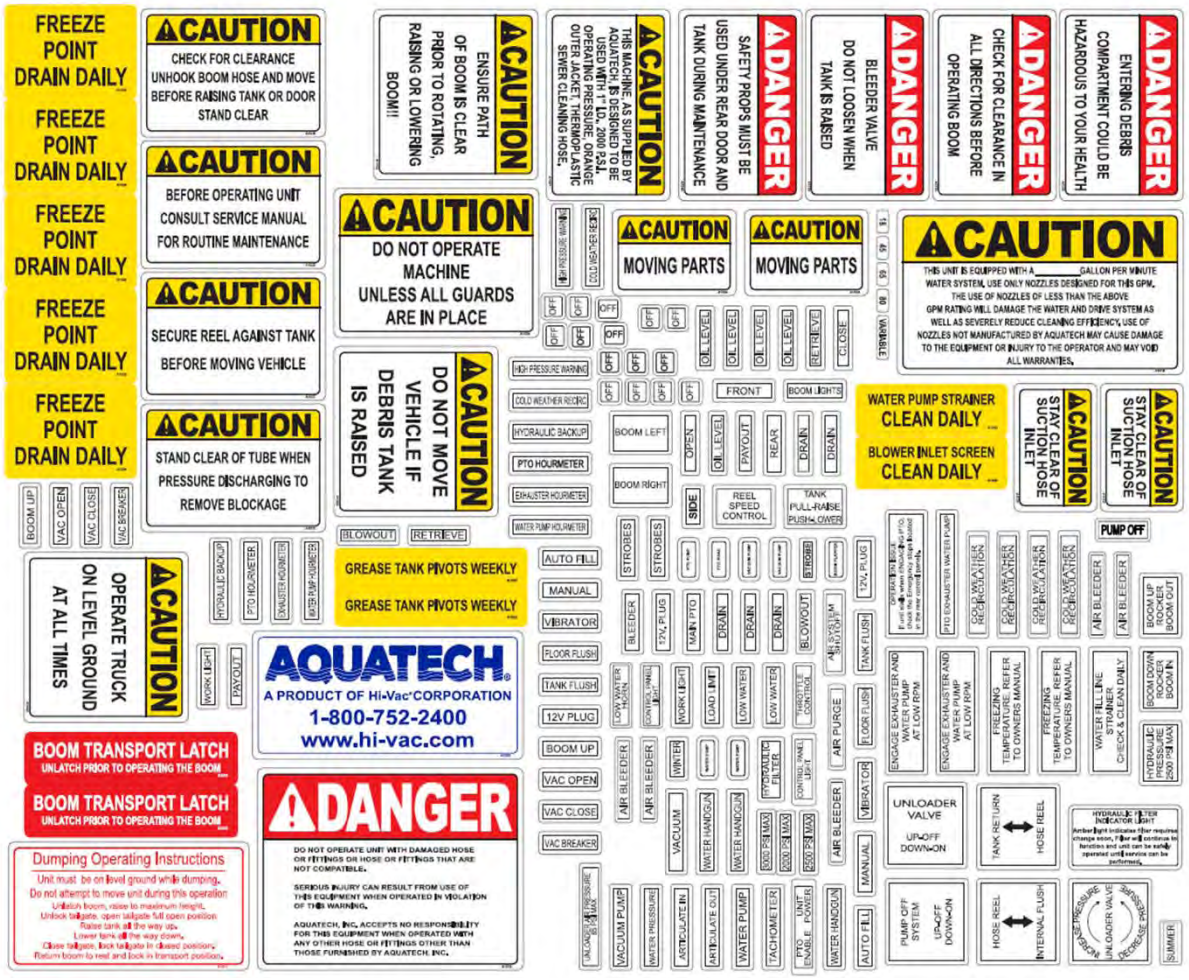

REFLECTORS

PART NO.	DESCRIPTION	PHOTO
U4106-0021	Red Reflector, 2" Round, Self Adhesive	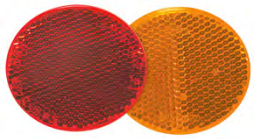
U4106-0022	Amber Reflector, 2" Round, Self Adhesive	
A388241	Red Reflector, 2" Round, Center Mount	
A120360	Red Reflector, 3" Round, Center Mount	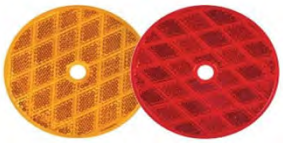
A120370	Amber Reflector, 3" Round, Center Mount	
A380097	Amber Reflector, 3" Round, Metal Housing	
A380098	Red Reflector, 3" Round, Metal Housing	
A120365	Red Reflector, Rectangular, Self Adhesive	
A120366	Amber Reflector, Rectangular, Self Adhesive	
29868	Red & White Conspicuity Tape, 2" Wide	
A380942	Red & White Conspicuity Tape, 3" Wide	

WATER TANK SIGNAGE

(BILLBOARD)

QTY	PART NUMBER	DESCRIPTION	A384092-1	A381092-2
4	A384082-1	Sign Stiffener	4	
24	A384091	Grommet, 3/8”ID for 1/8” Metal	24	24
2	A384093	Sign Backing, 1/8” X 54” X 120”, Aluminum	2	2
4	300000597 (replaces A385436)	Water Tank Strap w/Sign Mounts, 3 Lug (outer)	Req.	Req.
4	A385439	Water Tank Strap w/Sign Mounts, 2 Lug (inner)	Req.	Req.

Revised 8/24/2018

OPTIONAL MOUNTED STORAGE ACCESSORIES

PENDANT BASKET ASSEMBLY

A244673 *(POWDER COATED)*
A244673-MFD *(PAINTED)*

HYDRANT FILL HOSE BASKET

A304680

RACK FOR DECANT HOSE

A387025 (RACK)
A220144 (BUNGI CORD)

SHOVEL BRACKET

A338734-4

A384662

“Tiger Tail” Storage Tube

PART NO.:	A384662	DESCRIPTION:	TIGER TAIL STORAGE ASSEMBLY
ITEM	PART NO.	REQ'D.	DESCRIPTION
1	A384689	1	TIGER TAIL STORAGE WELDMENT
2	A384660	1	COVER, TIGER TAIL STORAGE
3	A384661	1	HINGE, TRU CLOSE, SELF CLOSING
4	A384688	1	SPACER, HINGE, TIGERTAIL STORAGE
5	BIN ITEM	4	WASHER, FLAT, 7/32" ID
6	BIN ITEM	4	NUT, HEX, #10–24
7	BIN ITEM	4	BOLT, HEX, #10 X 1–1/2"LG

SAFETY CONE HOLDERS

A220260-CH-NC
Frame Mounted Angle Cone Holder

A249164
Tool Box Mounted Cone Holder

A380650 (NLA)
Top of Frame Mounted

300001471
18” and 28” Cone Holder

Note: Safety cones and bungi cord are not included.
Please refer to our Jetting Accessories catalog for a complete listing of our safety cones.

PURCHASED TOOL BOXES

PART NO.	HEIGHT	DEPTH	LENGTH	COMMENT
A180551	10	21.5	24	Alum. Diamond Tread - Standard B10
A180559	10	21.5	36	Alum. Diamond Tread Plate, One Flip Down Door
A180550	10	21.5	48	Alum. Diamond Tread - Standard B10
A380544	12	10	42	SJ-600P Tool Box - 9 x 39 Top Door
A180574	12	12	36	Alum. Diamond Tread Plate, One Flip Down Door
A180578	12	12	44	Alum. Diamond Tread Plate, One Flip Down Door
A249130	12	18	36	SJ600P Tool Box, Alum.
A381528	14	24	36	Alum. Diamond Tread Plate, One Flip Down Door
A180542	14	29	36	Alum. Diamond Tread Plate, One Flip Down Door
A180552	18	18	30	Alum. Diamond Tread Plate, One Flip Down Door
A381808	18	18	36	Black Powder Coat Steel w/Folding T-Handle
A000025	18	18	48	Alum. Diamond Tread Plate
A381331	18	18	48	Black Powder Coat Steel w/Paddle Latch
A381470	18	18	48	Under Body Steel
A180582	18	18	48	Alum. Tread Plate, Recessed Door
A180583	18	18	60	Alum. Diamond Tread Plate, One Flip Down Door
A180580	18	18	72	Alum. Diamond Tread Plate, One Flip Down Door
A380547	18	24	24	Opens 18 X 24
A248104	19.25	19	12	SJ600P Tool Box
A180575	24	21.5	30	Alum. Diamond Tread Plate, One Flip Down Door
A180548	24	21.5	48	Alum. Diamond Tread Plate, One Flip Down Door
A380488	24	24	18	Alum. Diamond Tread Plate, Door on 18 X 24
A380548	24	24	24	Alum. Diamond Tread Plate
A180554	24	24	48	Alum. Diamond Tread Plate - 2 latches
A180555	24	24	60	Alum. Dia. Tread Plate, 1 Flip Down Door, 2 Latches
A381978	30	16	96	Alum. Diamond Tread Plate w/Shelf and 2 Doors,
A249094-25096	36	12	72	Alum. Diamond Tread Plate w/end doors,
A249094	36	15	60	Alum. Diamond Tread Plate, Behind Cab w/Shelf
A180549-S	36	15	72	w/Shelf
A180549	36	15	72	w/2 side doors
A180579	42	15	60	Alum. Diamond Tread Plate, One End Door
A180576	42	15	72	Alum. Diamond Tread Plate, End Doors
A180581	42	16.5	96	Alum. Diamond Tread Plate, End Door
A381527	42	16.5	96	Alum. Diamond Tread Plate, End Door
A380543	52	15	94	Alum. Diamond Tread Plate, End Door w/Shelf
A380546	52	15	94	Alum. Diamond Tread Plate, End Doors w/Shelf

ALUMINUM TOOL BOX PARTS

 A180590 Replacement T-Handle Latch for older tool boxes	 **10000279** Replacement “Whale Tail” Latch
 10000280 Inside Latch Cover/Shield for newer tool boxes	 **121001456** Door Gasket Tape for older tool boxes (sold per foot)
 10000283 Door Gasket Kit for newer tool boxes (enough to fit 24”x 60” tool box)	

A383872 WHALE TAIL DOOR LATCH

Used on late model units with power deck enclosures.

A383872-1 Rod End
for .31" Diameter Rod

←Set Screw

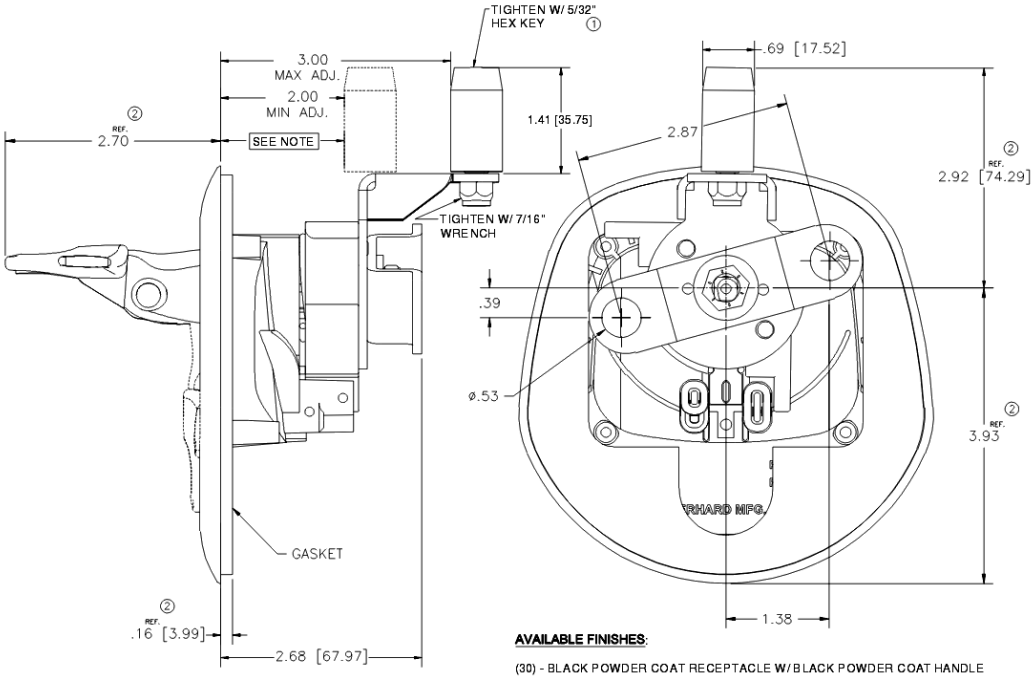

AQUATECH® Combination Jet/Vac System
A PRODUCT OF HI-VAC® CORPORATION

X-VAC® HYDRO EXCAVATOR
A Product of Hi-Vac® Corporation

SIDE TOOL TRAYS

END VIEW

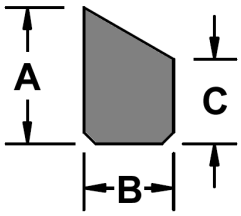

INSTALLATIONS

PART NO.	DESCRIPTION	A	B	C	A382811-1	A382811-15	A382811-PERF-1	A385800	A385800-1	A385801	A385801-1	A385804	A385804-1	A385805	A385805-1	
A385445	Tool Tray Assy., Alum., 119"L	5.94	3.53	2.50						2	1					
A385446	Tool Tray Assy., Steel, 119"L	5.94	3.53	2.50								2	1			NLA
A385437	Tool Tray Assy., Steel, 119"L	5.94	3.53	2.50				2	1							
A382811	Tool Tray Assy., Alum., 119"L	5.94	3.94	3.69	2											
A382811-PERF	Tool Tray Assy., Perforated	5.94	3.94	3.75			2									NLA
A382811-12	Tool Tray Assy., Alum., 180"L	5.97	3.91	3.72		2										NLA
A385447	Tool Tray Assy., Alum., 180"L	5.97	3.91	3.72										2	1	
A383658	Mounting Bracket, Tool Tray				6	8	6									
A385438	Mounting Bracket, Tool Tray							6	3	6	3	8	4	8	4	
A120365	Red Reflector, Rectangular				4			4	2	4	2	4	2	4	2	
A120366	Amber Reflector, Rectangular				4			4	2	4	2	4	2	4	1	

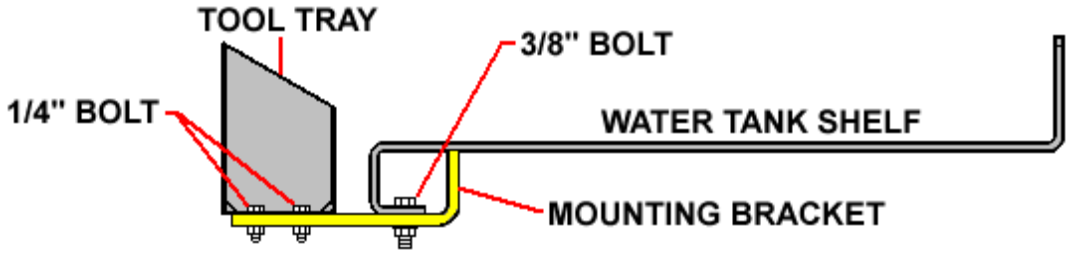

FRONT BUMPER MOUNTED VACUUM TUBE RACKS

INDIVIDUAL COMPONENTS

(See the following page for assemblies)

6” two tube bracket & clamp assembly (each) A244831
6” three tube bracket & clamp assembly (each)..... A381399-2
6” ring lock clamp only (welds on)..... U4804-0016
8” two tube bracket & clamp assembly (each) A242370
8” three tube bracket & clamp assembly (each)..... A381399
8” ring lock clamp only (welds on) *pictured below* A220425
Rubber inserts for 6” tube clamp (2 req. per clamp)..... A191697-03-MFD
Rubber inserts for 8” tube clamp (2 req. per clamp)..... A191697-01
Standard mounting bracket for straight bumper (each) *pictured below* A241571
LH mounting bracket for curved bumper *pictured below* A249357-L
RH mounting bracket for curved bumper *pictured below*..... A249357-R
Clevis pin, ½” x 1-3/4” A107329
Hitch pin, .126 wire diameter..... A102804
Spanner bar for three tube bracket, 41-3/4” long *(not shown)*..... A381397
Spanner bar for three tube bracket, 44-3/4” long *(not shown)*..... A304466

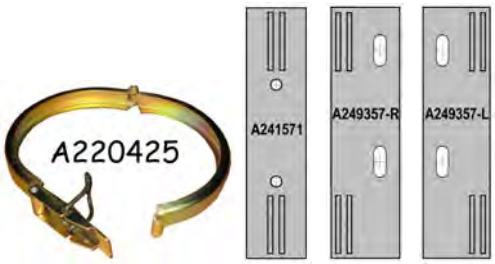

VACUUM TUBE BUMPER RACK INSTALLATIONS

		A240404-6	A240404-7	A240404-8	A240404 (2 req.)	A240404-1	A240404-9	A240404-3	A240404-4	A240404-5	A240404-10	A240404-26067	A338685 (2 Req.)
	TUBE SIZE	6"	6"	6"	8"	8"	8"	8"	8"	8"	8"	8"	8"
	TUBE CAPACITY	2	2	3	2	2	2	3	3	3	3	2	2
	BUMPER TYPE	Crv	Crv	Str	Str	Crv	Crv	Str	Crv	Crv	Crv	Str	Str
Part Number	**Description**	**Qty**	**Qty**	**Qty**	**Qty**	**Qty**	**Qty**	**Qty**	**Qty**	**Qty**	**Qty**	**Qty**	**Qty**
A244831	2 TUBE RACK WELDMENT, 6"	2	2										
A381399-2	3 TUBE RACK WELDMENT, 6"			2									
A242370	2 TUBE RACK WELDMENT, 8"				1	2							
A240404-9-5	2 TUBE RACK WELDMENT, 8" STACKED						2						
A338684	2 TUBE RACK WELDMENT, 8" BUNGI STYLE											2	1
A381399	3 TUBE RACK WELDMENT, 8"							2	2				
A381399-1	3 TUBE RACK WELDMENT, 8"									2			
A381399-3	3 TUBE RACK WELDMENT, 8"										2		
A240404-9-4L	BUMPER MOUNTING BRACKET,OFFSET,LEFT						1						
A240404-9-4R	BUMPER MOUNTING BRACKET,OFFSET,RIGHT						1						
A241571	BUMPER MOUNTING BRACKET, SYMETRICAL			2	1			2				2	1
A249357-L	BUMPER MOUNTING BRACKET,OFFSET,LEFT	1	1			1			1	1	1		
A249357-R	BUMPER MOUNTING BRACKET,OFFSET,RIGHT	1	1			1			1	1	1		
A102804	PIN,COTTER-7/16" THROUGH 3/4"	2	2	2	1	2	2	2	2	2	2	2	1
A105368	SCREW,CAP,5/8-11 X 1 3/4",HEX,	2	2	2	1	2	2	2	2	2	2	2	1
A107024	LOCKNUT, CRIMPED, PLATED, GR8	2	2	2	1	2	2	2	2	2	2	2	1
A107234	WASHER,FLAT,PLATED GRADE 8-5/8	2	2	2	1	2	2	2	2	2	2	2	1
A107329	CLEVIS PIN, ZINC PLATED STEEL	2		2	1	2	2	2	2	2	2	2	1
A191697-01	STRIP, RUBBER, 3/4" - 1" X 8 1				4	8	8	12	12	12	12		
A191697-03-MFD	RUBBER STRIP,3/4",1",6 1/2"	8	8	12									
A220148	BUNGI CORD, 14", RUBBER											4	*
A304466	SPANNER BAR - 44-3/4"L								2				
A381397	SPANNER BAR - 41-3/4" L			2				2		2	2		
18-0003	GASKET, 1/4" X 2", 50'											1	1

* Not included in kit, order separately.

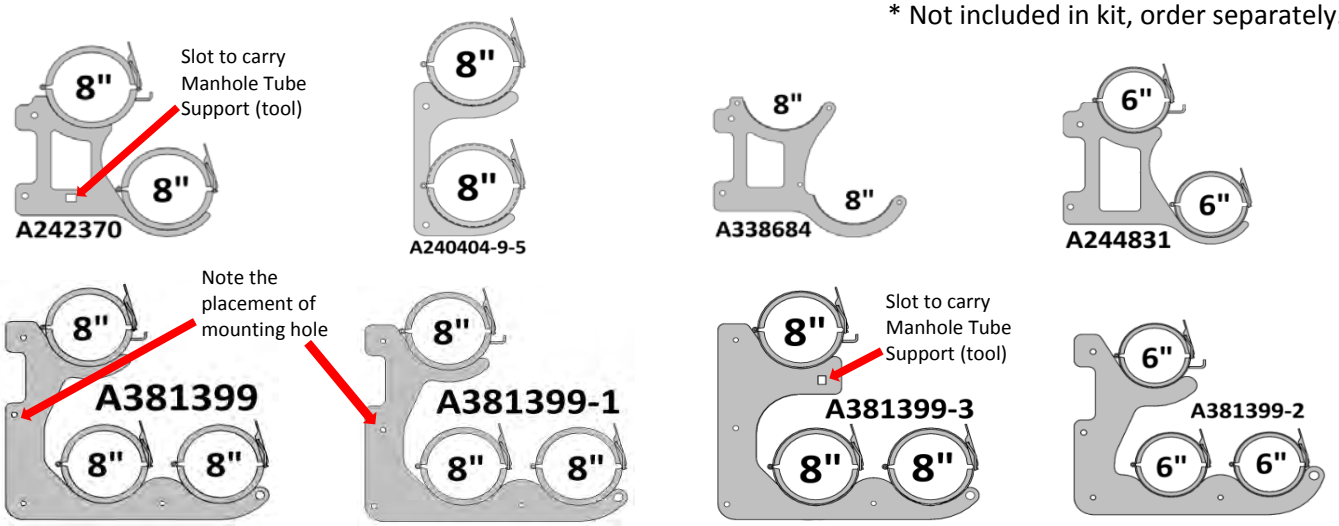

AQUATECH® SIDE MOUNTED VACUUM TUBE RACKS

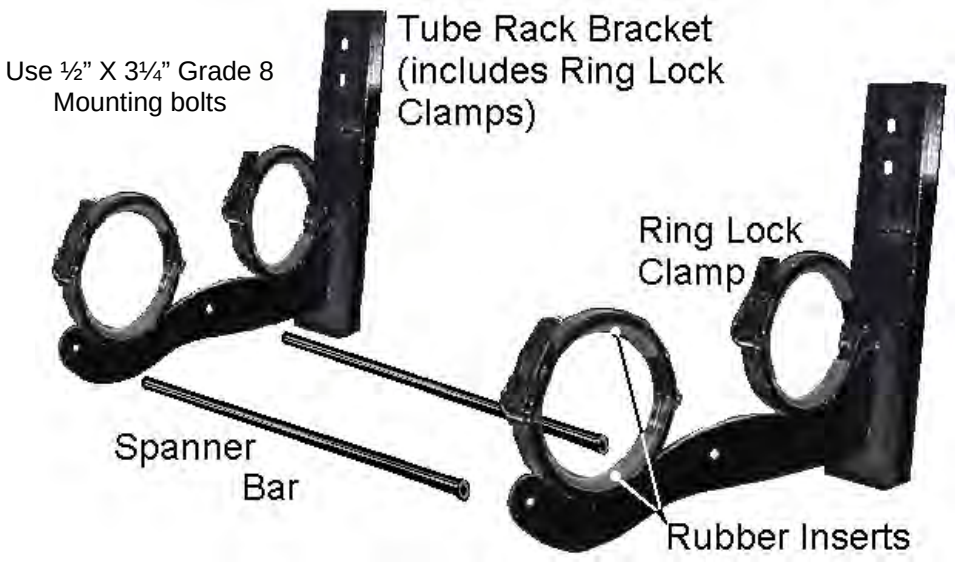

TWO-TUBE RACK KITS FOR 6" DIAMETER TUBES

6" rack assembly w/16¼" spanners (on option A000364-7 & -11)..... A245842
6" rack assembly w/47½" spanners (on option A000364-7 & -9)..... A245841

ONE-TUBE RACK KITS FOR 8" DIAMETER TUBES

8" rack assembly w/(2) 34¾" spanners (on option A000364-3)..... A244444-6
8" rack assembly w/(1) 45½" spanner (on option A000364-13)..... A244444-7
8" rack assembly w/(2) 45½" spanners (on option A000364-2)..... A244444-1

TWO-TUBE RACK KITS FOR 8" DIAMETER TUBES

8" rack assembly w/(2) 14¼" spanners (on option A000364, -1C, -2, -3, -10 & -13)..... A245843
8" rack assembly w/(2) 14¼" spanners (on option A000364-5 & A244444-4).....Use A245843
8" rack assembly w/(2) 25½" spanners (with pendant basket brackets) A244444-2
8" rack assembly w/(2) 34¾" spanners (on option A000364-12)..... A244444-8
8" rack assembly w/(2) 34¾" spanners A244444-3
8" rack assembly w/(2) 41¾" spanners A244444-5
8" rack assembly w/(2) 45½" spanners (on option A000364, -1, -8 & -12)..... A244444
8" rack assembly w/(2) 47½" spanners A245843-1

REPLACEMENT COMPONENTS

6" two-tube bracket & clamp assembly A245199
6" three-tube bracket & clamp assembly..... A245199-3
8" tube rack bracket & clamp assembly A304571
8" tube rack bracket & clamp assembly special FL/STG A244441-1
6" ring lock clamp only (welds on)..... U4804-0016
8" ring lock clamp only (welds on)..... A220425
Rubber inserts for 6" tube clamp (2 req. per clamp) A191697-03-MFD
Rubber inserts for 8" tube clamp (2 req. per clamp) A191697-01

SPANNER BARS----------

14-1/4" long	A381033	34-1/4" long	A338166
16-1/4" long	A338163	34-5/8" long	A338420
25-1/4" long	A338059	41" long	A304415
25-1/2" long	A381627	41-3/4" long	A381397
28" long	A384073	44" long	A381543
28-3/4" long	A338564	45-1/2" long	A381034
31-1/2" long	A381034-1	47-1/2" long	A381574

Revised 4/2/15

REAR DOOR MOUNTED FOLD DOWN TUBE RACKS

NOTE: Assembled racks are not available. The part numbers below are for reference to determine what bill of material is to be used.

PART NO.	BASE BOM	STYLE	TYPE	6" TUBES	8" TUBES	BUNGI	LOCKING	ACTIVE	COMMENT
A338421-1	--	2	Manual	2	2	--	NO	Y	2006 B-FR
A338421-4-INST	A338421-4	3	Manual	4		--	NO	Y	XV-5478
A338421-4-EXT	A338421-4	3	Manual	4		--	YES	Y	Extended Mount
A382807	--	5	Manual	--	3	--	YES	N	2007-08 X-10
A338421	--	1	Manual	--	4	--	NO	N	2005-06
A383398	--	8	Manual	--	4	8	YES	N	2008 X-10
A383408-1	A383408	8	Manual	--	4	8	YES	N	2007-2009
A382534-1	A382534	4	Manual	--	4	--	YES	Y	Narrow
200068010	A382534-1	4	Manual	--	4	--	YES	Y	Extended Mount
A338421-3	--	7	Hydraulic	1	3	--	YES	N	
A338421-2	--	6	Hydraulic	--	4	--	YES	N	2008-12
A338421-2-X-10	--	6	Hydraulic	--	4	--	YES	Y	2010-15
A338421-2-X10-EXT	--	6	Hydraulic	--	4	--	YES	N	Extended Mount
A338421-F10	--	6	Hydraulic	--	4	--	YES	Y	

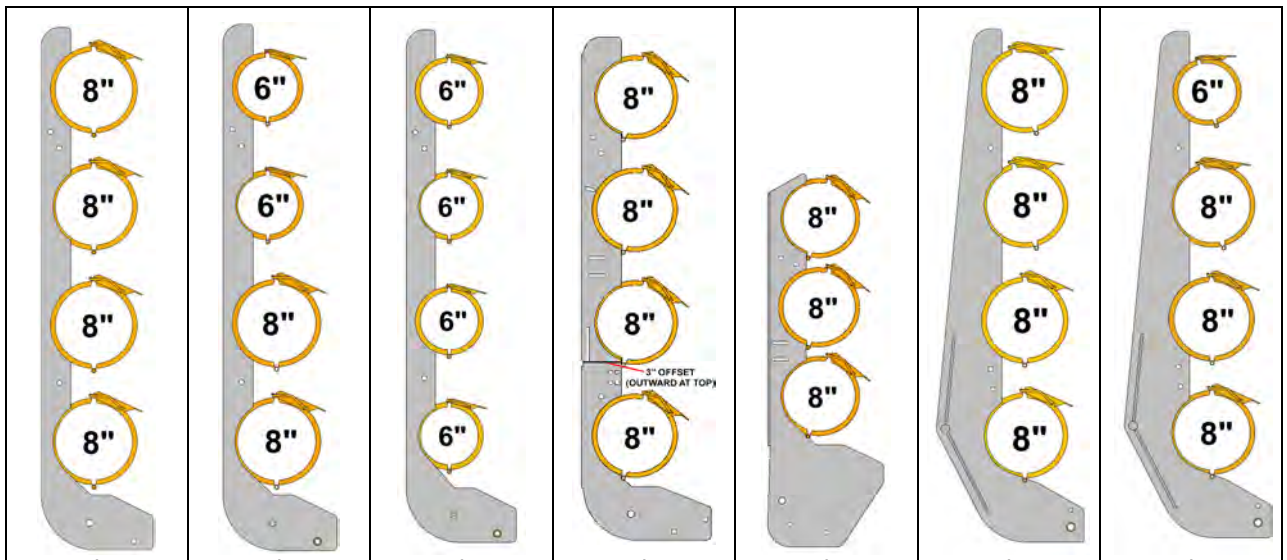

Style 1	Style 2	Style 3	Style 4	Style 5	Style 6	Style 7
A338419	A338419-1	A338419-2	A382532	A382803	A304134	A304148

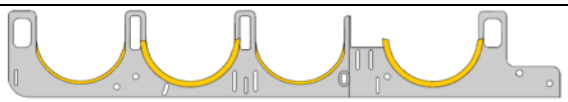

Style 8
A383405

MANUAL REAR DOOR MOUNTED PULL DOWN TUBE RACKS

DESCRIPTION	PART NO.	A338421	A338421-1	A338421-4	A338421-4-EXT	A382534	A382534-1	A382807	A383398	A383408	A384521	20068010
WELDMENT,STOP,TUBE RACK,X-10	A382536-1								1			
ASSEMBLEY,BRACKET,MOUNTING,SET	A383396								1	1	1	
ASSEMBLY,RACK,TUBE,SET,X-10	A383405								1	1		
BRACKET,TUBE RACK,EXTENSION	A238402				2							2
BUNGI CORD,10",BLACK RUBBER, W	A220144								8	8		
BUSHING,PIVOT,POLY.,11/16"I.D,	A383640								4	4	4	
BUSHING-3/16",9/16"	A338574	2	4	4	4	4	4	4				4
CLAMP,DESTACO 331R-TOGGLE LOCK	U4624-0013				2	2	2	2	2	2	2	2
EXTENSION,BRACKET,MOUNTING,X10	A383402								4			
EXTENSION,RACK,TUBE,X-10	A383403								2			
EYE BOLT, NON-LIFTING, ZINC PL	A152625			4	4	4	4	4				4
EYE BOLT,5/16"-18 X 4"LG.	A152621		4									
HAND GRIP, RUBBER	A220940	2	2	2	2	2	2	2	2	2	2	2
HANDLE WELDMENT, SWING DOWN	A382535					1	1		1	1	1	1
LOCKNUT,CRIMPED,1/4"-20,PLATED	A107016					16	16	16	16	16	16	16
LOCKNUT,CRIMPED,5/16"-18,PLATE	A107017		4									
LOCKNUT,NYLON,1/2"-13,PLATED,G	A107020	6	8	8	8	12	12	12	12	12	12	12
MOUNT,ASSEMBLY - LEFT SIDE, SP	A382531-L					1	1					1
MOUNT,ASSEMBLY - RIGHT SIDE, S	A382531-R					1	1					1
MOUNTING PLATE, TUBE RACK, CLA	A304147				2							
MOUNTING PLATE,LH,TUBE RACK	A338418-L	1	1	1	1							
MOUNTING PLATE,RH,TUBE RACK	A338418-R	1	1	1	1							
MOUNTING PLATE,SPRING-ASSISTED	A382804							2				
NUT,BARREL,TUBE RACK,X-10	A383397									2	2	
NUT,HEX,1/2-13,PLT,GR8	21-0108			4	4	4	4	4				4
PAD, RUBBER BUMPER, 3/8-16 THD	A246185-S					1	1					1
PAD,RUBBER BUMPER,3/8-24 THD	A246185	1						1		1	1	
PIN, HITCH, 1/2"X 3-5/8" STEEL	A107321	2	1	1	1	2	2	2	2	2	2	2
PIN,COTTER-5/8" THROUGH 7/8" S	A107525	2	4	4	4	4	4	4	4	4	4	4
PLATE, EXTENSION - TUBE RACK	A238403				2							
PLATE, EXTENSION - TUBE RACK	A238403-1											2
RUBBER STRIP,3/4" X 1" X 8-1/2" LG	A191697-01				16		1				16	1
SCREW,BUTTON HEAD,1/2-13 X 1 1	A105171	2	2	2	2							
SCREW,CAP,1/2"-13 X 1-1/2",HH,	A105176	10	10	10	10	12	12	10	12	12	12	12
SCREW,CAP,1/4"-20 X 1",HH,GR8,	A103568					16	16	16	16	16	16	16
SCREW,CAP,BLACK OXIDE-1/2",13	A105169					2	2	2	2	2	2	2
SET,WELDMENT,TUBE RACK,W/8" CL	A384523										1	
SPACER,CLAMP,TUBE RACK	A304146				2							
SPANNER BAR - 34 5/8" L	A338420	2	2	2	2	1	1	1	1	1	1	1
SPANNER BAR, TUBE RACK	121005879					1	1					1
SPANNER BAR,28-3/4"L,FOR TUBE	A382533								1	1	1	
SPRING-EXTENSION,1.312" DIA. X	A220922	4	4	4	4	4	4	4	4	4	4	4
STOP, TUBE RACK, EXTENDED RACK	A382536-2				1							
STOP, TUBE RACK, EXTENDED RACK	A382536-3											1
STOP,TUBE RACK,REAR	A338576-1		1									
STOP,TUBE RACK,SWING DOWN	A382536					1	1			1	1	1
TRIM, 1/4" PUSH-ON GRIP,EVEN S	A249840									12		
TUBE HOLDER,LH,TUBE RACK,8" (4)	A338419-L	1										
TUBE HOLDER,RH,TUBE RACK,8" (4)	A338419-R	1										
TUBE HOLDER,LH,8" (2) & 6" (2)	A338419-1-L		1									
TUBE HOLDER,RH,8" (2) & 6" (2)	A338419-1-R		1									
TUBE HOLDER,LH, 6" (4)	A338419-2-L			1	1							
TUBE HOLDER,RH, 6" (4)	A338419-2-R			1	1							
TUBE HOLDER,LH,TUBE RACK,8" (4)	A382532-L					1	1					1
TUBE HOLDER,RH,TUBE RACK,8" (4)	A382532-R					1	1					1
TUBE HOLDER,SPRING ASSISTED,RE	A382803							2				
WASHER,FLAT,1/2" USS,PLATED,GR	A107226	12	12	12	12	24	24	24	24	24	24	24
WASHER,FLAT,1/4" SAE,PLATED,GR	A107210					24	24	24	24	24	24	24
WASHER,LOCK,1/2"NOM,GR8,PLATED	21-0908	4	4	4	4	4	4	2	4	4	4	4
WELDMENT,HANDLE BAR,TUBE RACK	A338423	1	1	1	1							
WELDMENT,HANDLE, SPRING ASSIST	A382806							1				
WELDMENT,STOP,TUBE RACK	A338576	1										
WELDMENT,STOP,TUBE RACK	A382805							1				

HYDRAULIC DROP DOWN REAR DOOR MOUNTED TUBE RACKS

DESCRIPTION	PART NO.	A338421-2	A338421-2-X-10	A338421-2-X10-EXT	A338421-3	A338421-F10
BOLT KIT - F3 MD06 VALVE	A383999					1
BOOT,TOGGLE SWITCH	A121735	1	1	1	1	1
BUSHING-3/16",11/16"ID	A383640	2				2
BUSHING-3/16",9/16"	A338574	2	2	2	2	2
CLAMP,DESTACO 331R-TOGGLE LOCK	U4624-0013	2	2	2	2	2
CLAMP-1.75"ID,SINGLE BOLT	A220683	5	5	5	5	5
CYLINDER, HYDRAULIC, 2"BORE -	A304137	2	2	2	2	2
EXTENSION,BRACKET,MOUNTING,X-1	A383402			2		
EXTENSION,REAR DOOR TUBE RACK	A383403-1			2		
FITTING,ELBOW,90D- 1/2" MSAE X	A135379	2	2		2	2
FITTING,ELBOW,90D- 1/2"MJIC X	A380378	1	1	1	1	1
FITTING,ELBOW,90D- 1/4" MNPT X	A135301	2	2	2	2	2
FITTING,STRAIGHT- 1/2" MSAE X	A100067	2	2	2	2	2
FITTING,STRAIGHT- 1/2" MSAE X	U6002-0152	2	2	2	2	2
FITTING,STRAIGHT- 3/8" MSAE X	A133049	2	2	2	2	2
FITTING,STRAIGHT- 3/8" MSAE X	A135170	3	3	3		3
FITTING,TEE,STEEL- 3/8"MSAE X	A133048	2	2	2	2	2
FITTING,TEE,STEEL- RUN, 3/8" F	A135251	1	1	1	1	1
FITTING,TEE,STEEL-RUN, 1/2" FJ	A135250	1	1	1	1	1
HOSE KIT,HYDRAULIC TUBE RACK	A304142	1	1		1	1
HOSE KIT,HYDRAULIC TUBE RACK	A304142-EXT			1		
LOCKNUT,NYLON,1/2"-13,PLATED,G	A107020	6	6	6	6	6
MOUNT, TUBE RACK	A249454	1	1	1	1	1
MOUNTING PLATE, TUBE RACK, CLA	A304147	2	2	2	2	2
O-RING,VALVE,DIRECTIONAL CONTR	A110486-1					1
PAD, RUBBER BUMPER, 3/8-16 THD	A246185-S	1	1			
PAD,RUBBER BUMPER,3/8-24 THD	A246185			1		1
SCREW,CAP,1/2"-13 X 1-1/2",HH,	A105176	8	8	8	8	8
SPACER,CLAMP,TUBE RACK	A304146	2	2	2	2	2
SPANNER BAR - 34 1/4" L	A338166	2	2	2	2	2
STOP, TUBE RACK, EXTENDED RACK	A382536-2			1		
STOP,TUBE RACK,REAR	A304141	2		2		
STOP,TUBE RACK,REAR	A338576-1	1	1		1	1
SWITCH, TOGGLE, SPDT - MOM ON	A120859	1	1	1	1	1
TUBE RACK,SWING DOWN, LH, 6" & 8"	A304148-L				1	
TUBE RACK,SWING DOWN, RH, 6" & 8"	A304148-R				1	
TUBE RACK,SWING DOWN, LH, 8"	A304134-L	1	1	1		1
TUBE RACK,SWING DOWN, RH, 8"	A304134-R	1	1	1		1
TUBE ASSY, HYDRAULIC, 3/4" FORMED	A246525					1
VALVE,DIRECTIONAL CONTROL-SING	A110486	1			1	1
VALVE,FLOW CONTROL,PRESSURE CO	A249366	2	2	2	2	2
VALVE,HYDRAULIC RELIEF-1200 PS	A110796	1	1		1	1
VERTICAL MOUNTING PLATE, LH	A304133-L	1	1	1	1	1
VERTICAL MOUNTING PLATE, RH	A304133-R	1	1	1	1	1
WASHER,FLAT,1/2" USS,PLATED,GR	A107226	14	14	14	14	14
WASHER,LOCK,1/2"NOM,GR8,PLATED	21-0908	4	4	4	4	4

REAR DOOR TUBE RACK COMMON REPAIR COMPONENTS

 U4624-0029 **LOCK CLAMP**	 **A220940** **HANDLE GRIP**
 RUBBER CLAMP INSERTS **(ORDER TWO PER CLAMP)** **6” A191697-03-MFD** **8” A191697-01**	 **6” - U4804-0016** **8” - A220425** **TUBE CLAMP (WELDS ON)**
 A304137 **HYDRAULIC CYLINDER**	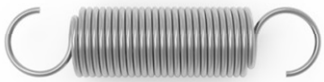 **A220922** **TENSION SPRING** **1-5/16"DIA. X 10.3"L**
 A245846 **MOUNTING BRACKETS**	

A245848-2

REAR DOOR TUBE RACK OPTION

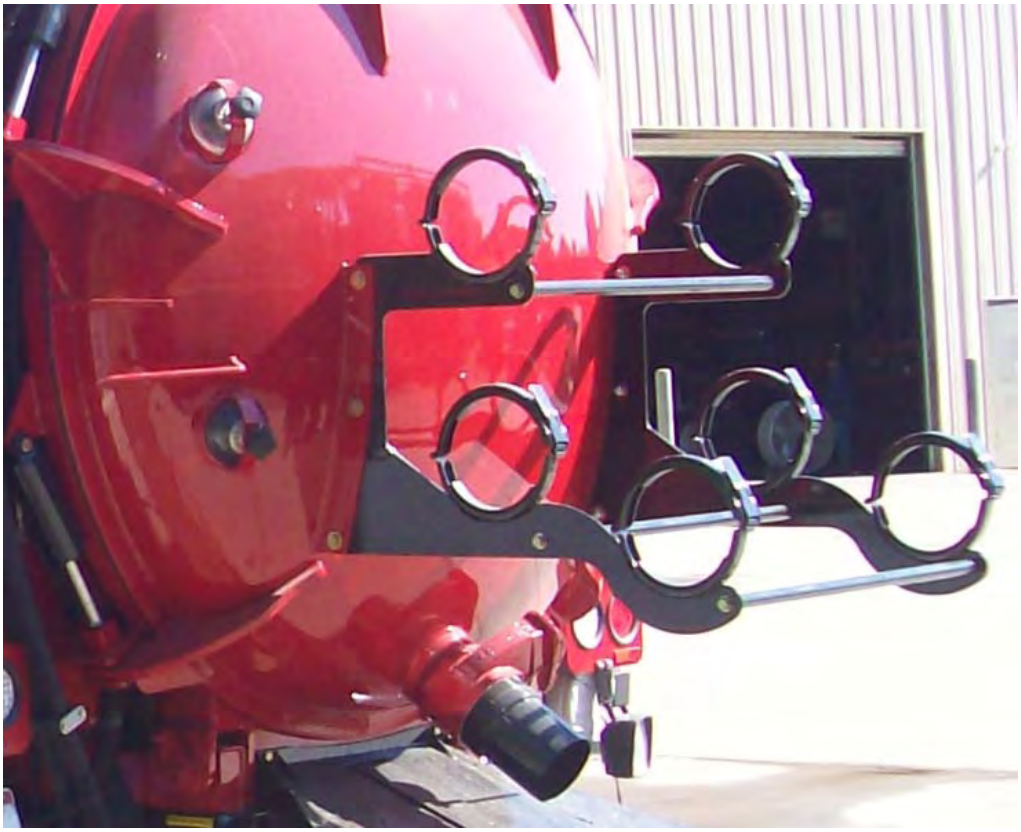

Level	Part Number	Description	Qty
1	A245848-1	TUBE HOLDER WELDMENT,(3) 8" TUBE	2
2	A245848	BRACKET,(3) 8" TUBE RACK,REAR	1
2	A220425	CLAMP,TRAVIS-8"	3
1	A338166	SPANNER BAR - 34 1/4" L	3
1	A191697-01	STRIP, RUBBER, 3/4" - 1" X 8 1	12

A306021 VERTICAL 2-TUBE RACK

A306011 VERTICAL 3-TUBE RACK

A388042 VERTICAL TUBE RACK

A305100

SILENCER MOUNTED TUBE RACK

Two shown in the photo above.

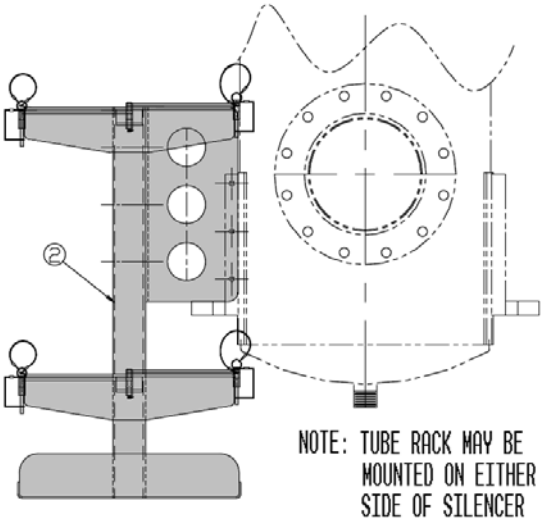

A305120 SILENCER MOUNT TUBE RACK

A383709 SILENCER MOUNTED TUBE RACK

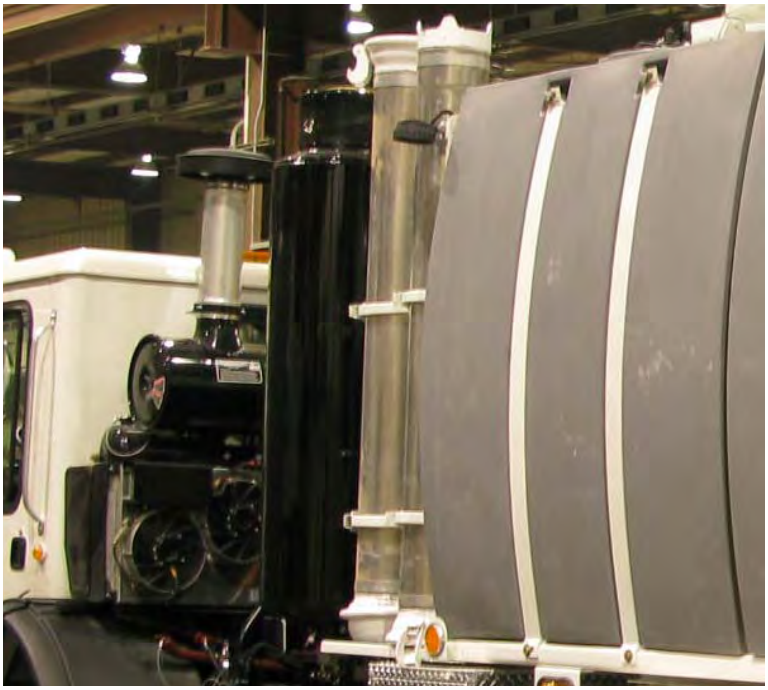

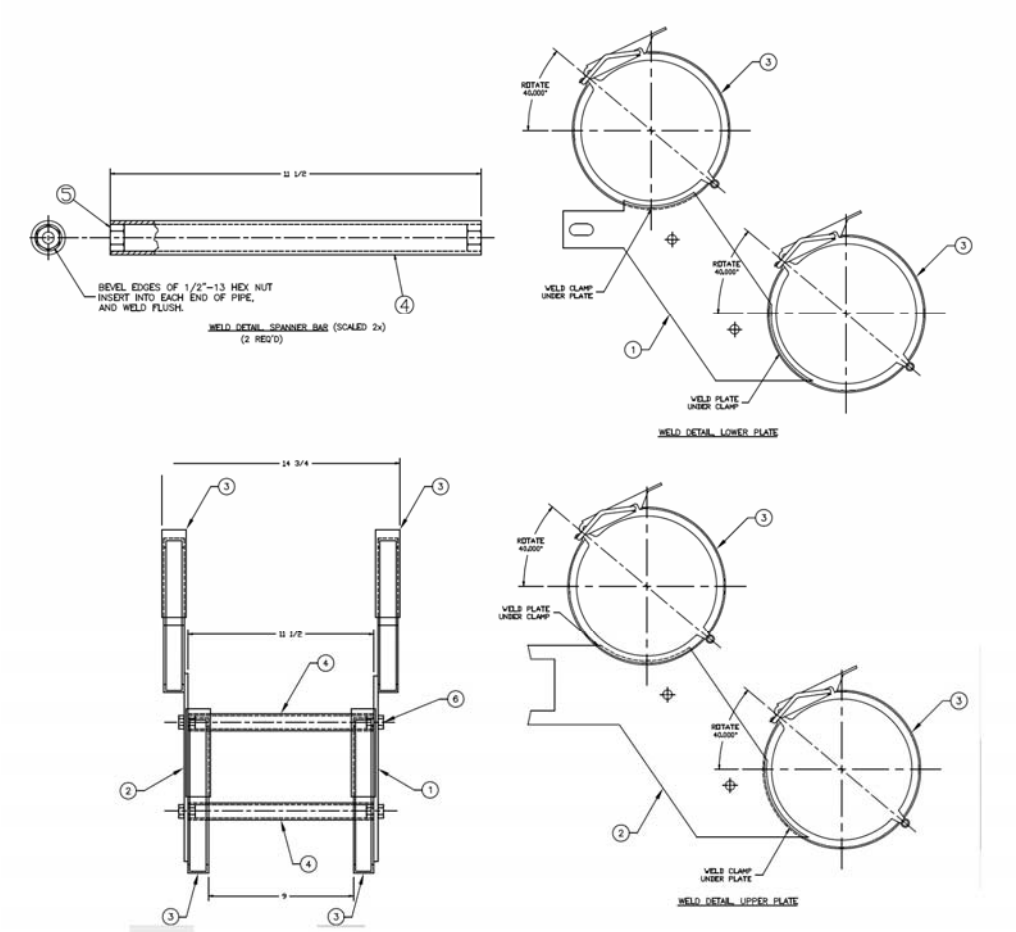

AQUATECH®
Combination Jet/Vac System
A PRODUCT OF HI-VAC® CORPORATION

X-VAC®
HYDRO EXCAVATOR
A Product of Hi-Vac® Corporation

SINGLE AXLE FENDERS

SINGLE AXLE FENDER INSTALLATIONS

Part Number	Description	A380140 * Qty	A380140-3 * Qty	A380140-4 Qty	A380140-6 Qty	A380140-8 * Qty
A160083	FENDER, SINGLE AXLE, ALUM.	2	2	2	2	2
A135194	BRACKET, FENDER		2			
A135194-3	BRACKET, FENDER			2		
A135194-4 B	MOUNT, SUBFRAME	4	2	4	4	4
A135194-5 A	BRACKET, FENDER	2	2		2	
A135194-6	BRACKET, FENDER	2				
A135194-9 A	BRACKET, FENDER			2	2	4
A135194-14	BRACKET, FENDER, ADJUSTABLE					
A380135	SCREW,SET,ALLOY, ½"-13 X 1½	8	8	8	8	8
U4607-0228	U BOLT- 2" X 3", 5/16"-18	8	8	8	8	8

* Inactive installation (not used on current models)

TANDEM AXLE FENDERS

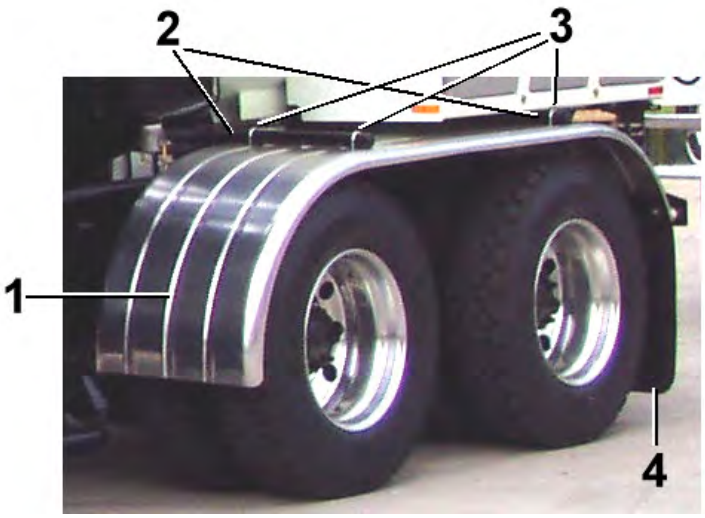

FENDER SUPPORTS
RH Side A380065-R (pictured)
LH Side A380065-L

This picture shows the same fender and mud flap as above, but it is bolted to brackets welded to the poly-tank support base.

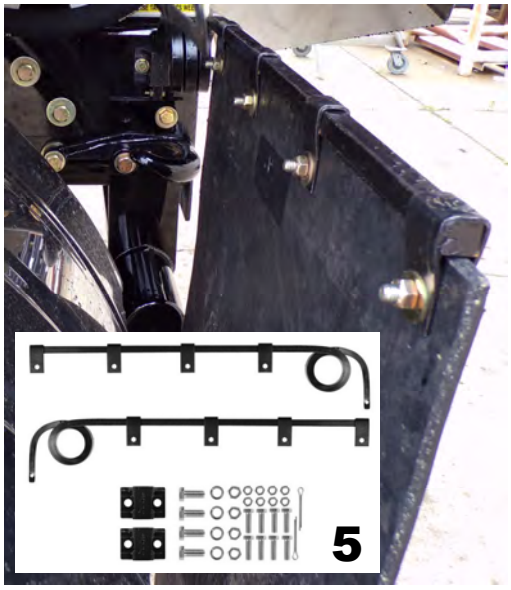

ITEM	PART NUMBER	DESCRIPTION	QTY.
1	A180414	Aluminum Tandem Fender	2
	A383785	Stainless Steel Tandem Fender	2
2	See Next Page	Fender Mounting Bracket	
3	U4607-0228	U-Bolt	8
4	A222240	Mud Flap, 24” X 30” Aquatech Logo	2
	A249792	Mud Flap, 24” X 36” Plain	
	A383073	Mud Flap, 24” X 36” X-Vac Logo	
5	U4631-0027	Mud Flap Hanger	2

FENDER MOUNTING BRACKET

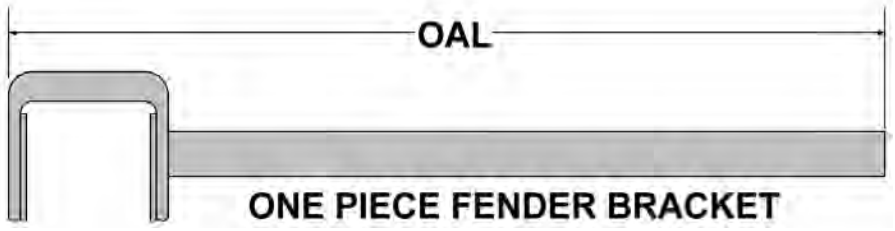

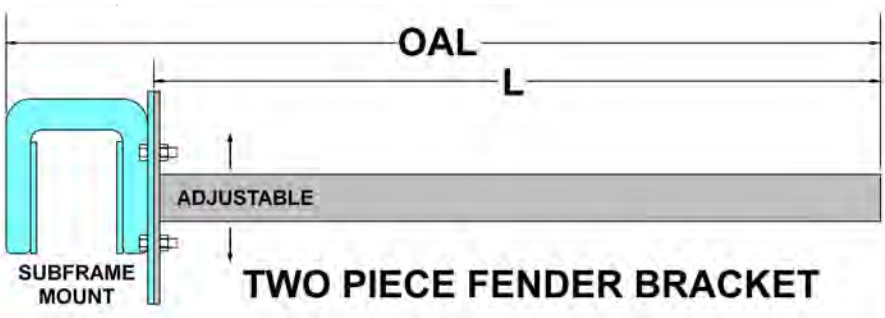

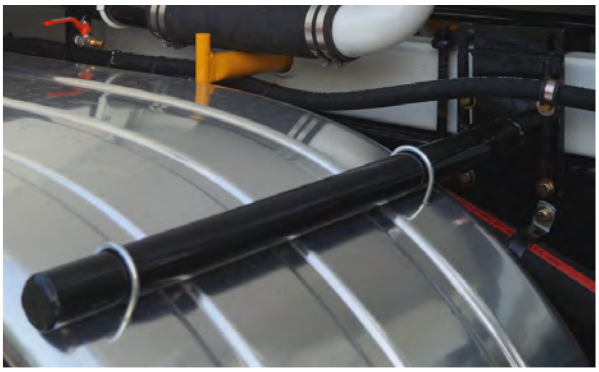

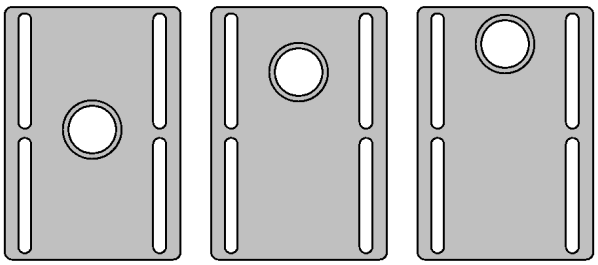

A135194-3 A135194-6 A135194-9

PART NUMBER	DESCRIPTION	OAL	L
A135194	1-PC Fender Bracket & Mount	35.5”	--
A135194-1	1-PC Fender Bracket & Mount	37”	--
A135194-5 A	2-PC Adjustable Fender Bracket & Mount	29.5”	25”
A135194-2	A135194-3 Bracket. bolted to A135194-4 Mount	35.5”	29.5”
A135194-8	A135194-2 w/Welded 90° Tabs	35.5”	29.5”
A135194-3 A	Adj. Fender Bracket - Used w/A135194-4 B	--	29.5”
A135194-6	Adj. Fender Bracket - Used w/A135194-4 B	--	29.5”
A135194-9 A	Adj. Fender Bracket - Used w/A135194-4 B	--	29.5”
A135194-4 B	Subframe Mount, 6”W	--	--

B-SERIES BUMPER & SPLASH SHIELDS

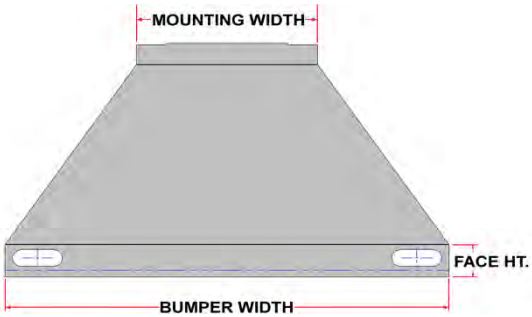

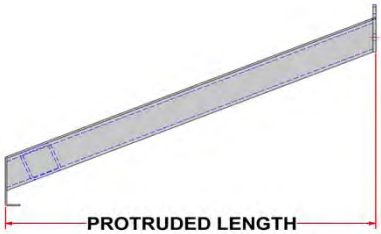

Part Number	Protruded Length	Bumper Width	Bumper Face Height	Mounting Width	Lamp Openings	Comment
A249800-3	21-5/8"	60"	4-7/8"	24-1/2"	4 Oval	Short Reach
A246238-5	28-1/16"	60"	4-7/8"	21-1/2"	2 Oval	f/Narrow Frame (export)
A246238-9 A384667-1 *	28-1/16"	60"	4-7/8"	21-1/2"	2 Oval	f/Narrow Frame w/Door Prop (export)
A246238	28-1/16"	60"	4-7/8"	24-1/2"	2 Oval	Standard
A246238-6	28-1/16"	60"	4-7/8"	24-1/2"	2 Oval	Folded down side edges
A249800-1	28-1/16"	60"	4-7/8"	24-1/2"	4 Oval	
A246238-7 A384667 *	28-1/16"	60"	4-7/8"	24-1/2"	2 Oval	W/Built-In Door Prop
A249800-2 A384669 *	28-1/16"	60"	4-7/8"	24-1/2"	4 Oval	W/Built-In Door Prop
A246238-7-MOD A384667-MOD *	28-1/16"	60"	4-7/8"	24-1/2"	2 Oval 2 Rect	W/Built-In Door Prop
A246238-3	36-3/16"	60"	8"	24-1/2"	2 Oval	Long Reach
A246238-4	36-3/16"	60"	8"	24-1/2"	4 Oval	Long Reach

* Includes Door Prop

B-SERIES RECTANGULAR BUMPERS

Part Number	Protruded Length	Bumper Width	Bumper Face Height	Frame Mounting Width	Lamp Openings	Comment
A338696	40-11/16"	60"	4"	34-1/4"	2 Oval	
A338696-1	40-11/16"	60"	4"	34-3/4"	2 Oval	

AQUATECH

A382413-2-PARTS TANK MOUNTED SPLASH SHIELD,X-10 STYLE

Part Number	Description	Qty	U/M	SC
A382413-1	WELDMENT,SPLASH SHIELD,TANK MOUNTED	1	EA	M
A382409	WELD TAB,SPLASH SHIELD	8	EA	M

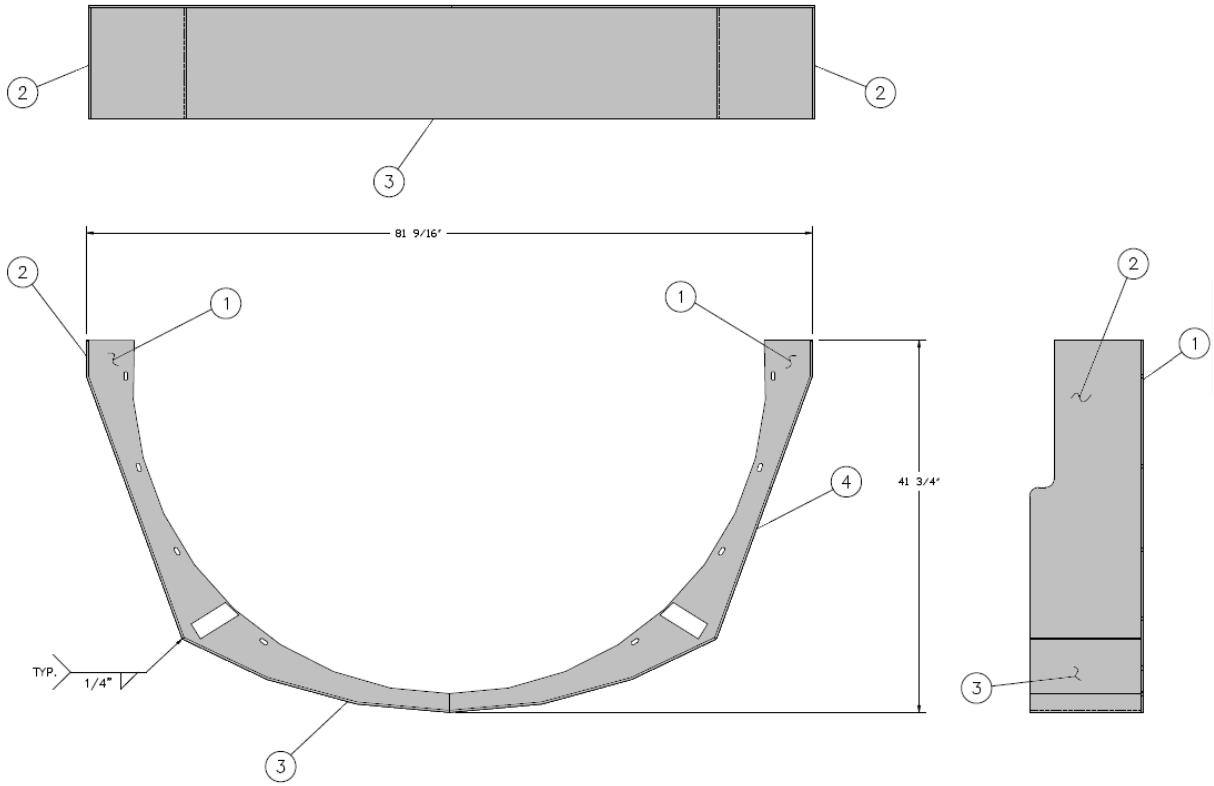

A382413-9-KIT SPLASH SHIELD,FULL,REQUIRES TUBE BUMPER

Part Number	Description	Qty	U/M	SC
A382410	PLATE,BACKING,SPLASH SHIELD,HA	2	EA	M
A382411-6	PLATE,SIDE,SPLASH SHIELD,CURVE	2	EA	M
A382412-6	PLATE,BOTTOM,SPLASH SHIELD,CUR	1	EA	M
A382409	WELD TAB,SPLASH SHIELD	8	EA	M

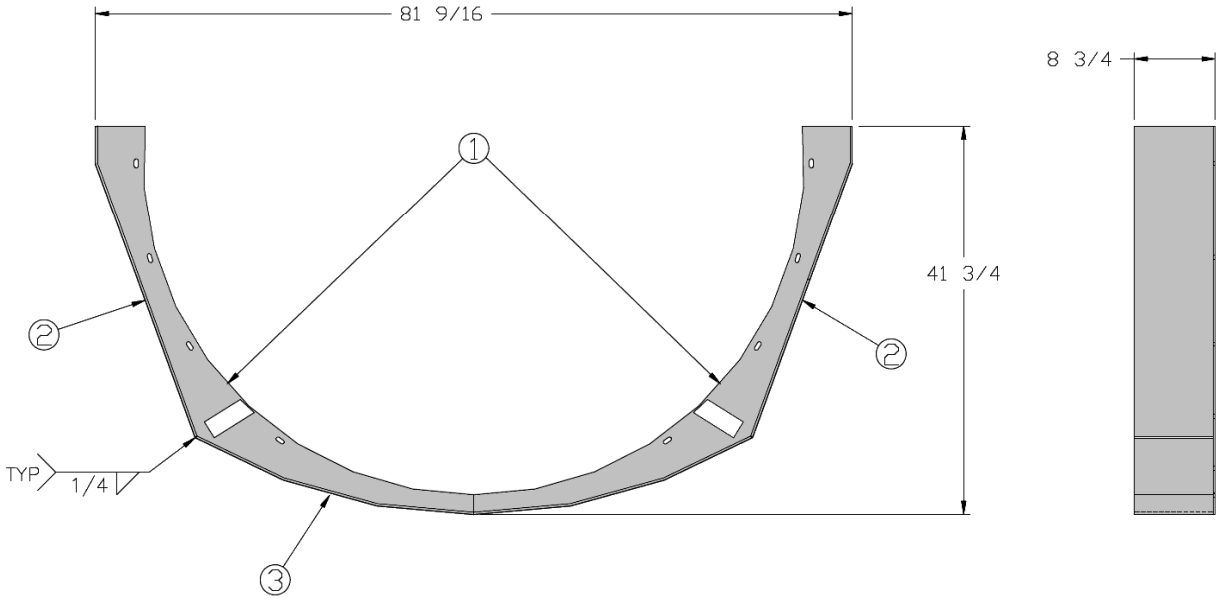

A382413-5-KIT SIDE SPLASH SHIELD KIT,B-SERIES,STD BMPR

ITEM	Part Number	Description	Qty	U/M	SC
(2)	A382413-3	WELDMENT,SPLASH SHIELD,RH	1	EA	M
(3)	A382413-4	WELDMENT,SPLASH SHIELD,LH	1	EA	M
(4)	A304010-R	BRACKET,SPLASH SHIELD,RH	1	EA	M
(5)	A304010-L	BRACKET,SPLASH SHIELD,LH	1	EA	M
(6)	A104434	SCREW,CAP,3/8"-16 X 1",HH PLATED	16	EA	P
(7)	A107218	WASHER,FLAT,3/8" SAE,PLATED,GR8	30	EA	P
(8)	A107294	WASHER,LOCK,3/8",PLT,GR8	16	EA	P
(9)	A107074	NUT,HEX,3/8"-16,GR8,PLATED	14	EA	P
n.i.	A382409	WELD TAB,SPLASH SHIELD	8	EA	M

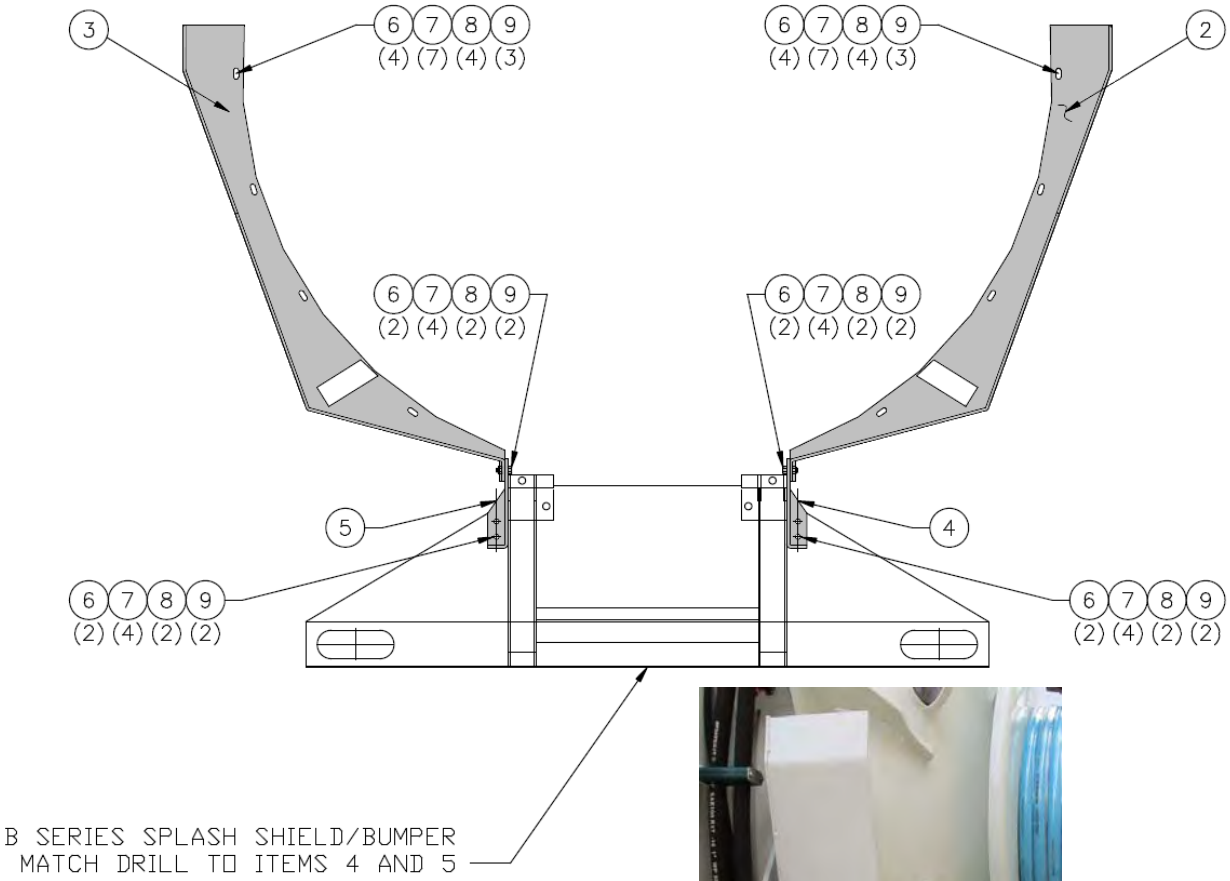

AQUATECH Combination Jet/Vac System
A PRODUCT OF HI-VAC® CORPORATION

X-VAC HYDRO EXCAVATOR
A Product of Hi-Vac® Corporation

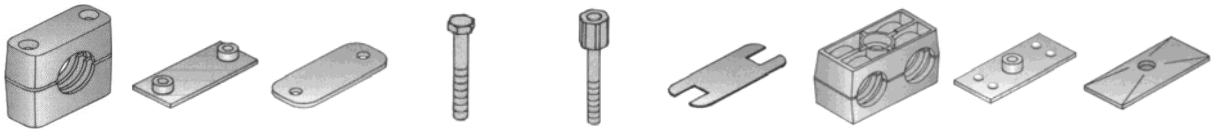

POLY HOSE SUPPORTS

Group	Bore Diameter mm	Bore Diameter Inch	Approx. Hose Size *	Approx. Pipe Size	Clamp Body (2 Req.)	Weld Plate	Cover Plate	Hexagon Head Bolt	Stacking Bolt	Safety Locking Plate	Double Clamp (2 Req.)	Double Weld Plate	Double Cover Plate
GR2	12.7	0.500 (1/2)			A221051	A221053	A221052	A103580	SO	SO	A220565	A220563	A220562
	16	0.625 (5/8)			A220566						A220567		
GR3	19	0.750 (3/4)			SO	A220579	A220578	1/4-20x1.5	SO	SO	A220572	A220574	A220573
	22.2	0.875 (7/8)	1/2"	1/2"	A220577								
	25.4	1.000			A220576						A220569		
GR4	28	1.102	3/4"	3/4"	A220581	A220583	A220582	A103581	SO	SO	N/A	N/A	N/A
GR5	32	1.250 (1¼)			A220586	A220588	A220587	A103604	A220591	A220589	SO	SO	SO
	33.4	1.315		1"	A220584						SO		
	33.7	1.327			A220597						N/A		
	35.7	1.406	1" Aeroquip		A249358								
	38.1	1.500 (1½)	1" Dayco		A220593						SO		
GR6	48.3	1.902	1-1/4"	1-1/2"	A220596 (Kit) Includes 2 Clamp Bodies, Weld Plate, Cover Plate & 2 Bolts								

* Outside diameters of hoses vary due to different wall thicknesses.

SO = Special Order Item Only

To identify the size of an clamp, look on the inside surface to find the metric or fractional bore dia. embossed in the plastic.

Current Double Stacked 1" Hose Support (beginning early 2005)

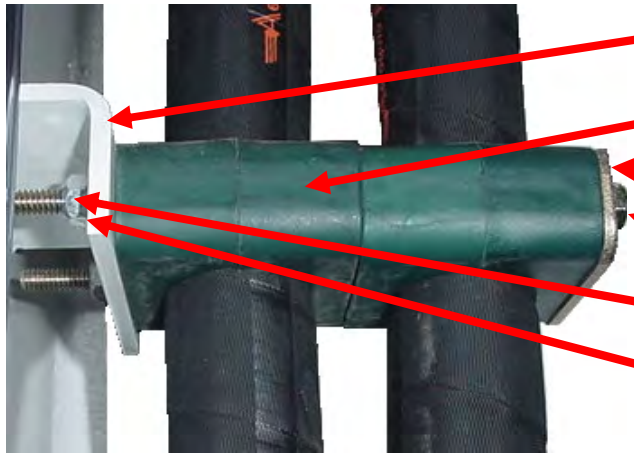

A220588-1	Weld Angle Bracket
A220593	Clamp Body (4) *thru 2015*
A249358	Clamp Body (4) *2016 on*
A220587	Cover Plate (1)
A103685	¼"-20 x 5½" Gr. 8 Bolt (2)
A107016	¼"-20 Locking Nut (2)
A107210	¼"-20 Gr. 8 Washer (2)

ACCESS STEPS & HANDLES

FOLD DOWN STEPS

A222516

(2 Required)

WELD-ON MOUNTING PLATES
2 ea. A238961

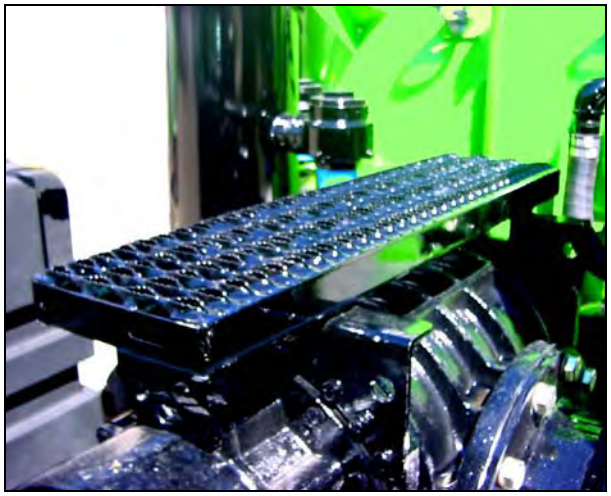

BLOWER PLATFORM

A246424

MOUNTING BRACKETS
For Roots 624
2 ea. A221372-L
2 ea. A221372-R
For Roots 824, 827 & Hibon T56
4 ea. A000066

NON-SKID STEP

A245284

(Welded on the silencer)

GRAB HANDLE

A220810

(2 on turret, 1 on silencer)

A243924-1-PARTS Retro-Fit Kit for units with 624 blower.
A243924-2-PARTS Retro-Fit Kit for units with 824, 827 & T56 blower.

REMOTE GREASE STATION KITS & INSTALLATIONS

Part Number	Description	A381531 (Custom Kit) Qty	A381531-1 (Standard Kit) Qty	A381531-2 Qty	A381531-ENCLOSURE Qty
A132815	1/8"NPT STREET TEE, M X F X F		2		
A304132	J-BOX, 8X6X3, REMOTE GREASE MANIFOLD				1
A380065-HDL	SUPPORT, FENDER, LH				1
A380065-HDR	SUPPORT, FENDER, RH				1
A381532-1	GREASE ZERK, 1/8"MNPT STANDARD	12	12	12	12
A381532-2	FITTING, ADAPTER, 90° ELBOW	10	7	10	10
A381532-3	ADAPTER, STR., 6MM COMP. X 1/8"MNPT		18		
A381532-4	FITTING, ELBOW, 90°, 1/8"MBSP X 1/8"FNPT	8	6	8	8
A381532-5	UNION, STEEL, 6MM COMPRESSION		4		
A381532-6	HOSE, GREASE, 4MM ID X 9MM OD	329	350	329	329
A381532-7	FITTING, REUSABLE-4MM ID HOSE x 6MM TUBE	30	24	30	30
A381532-8	STRAIGHT COUPLING (OLIVE TYPE)	30	4	30	30
A383051-P	ADAPTER, STR., 1/4"-28 X 1/8"FNPT STEEL		2		1
A383258	MANIFOLD BAR, 12 STATION		1	1	
A383258-1	MANIFOLD BAR, 6 STATION				1
A384693	WORM GEAR BRACKET & COUPLING		1		
121003087 Rev A	WELDING STRIP WITH G1/8 HOLES	1		1	1

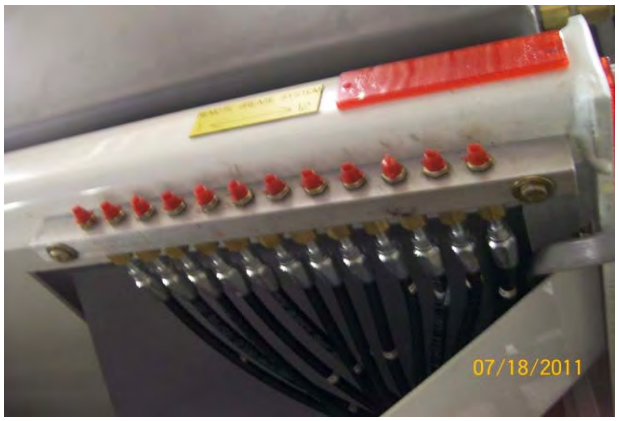

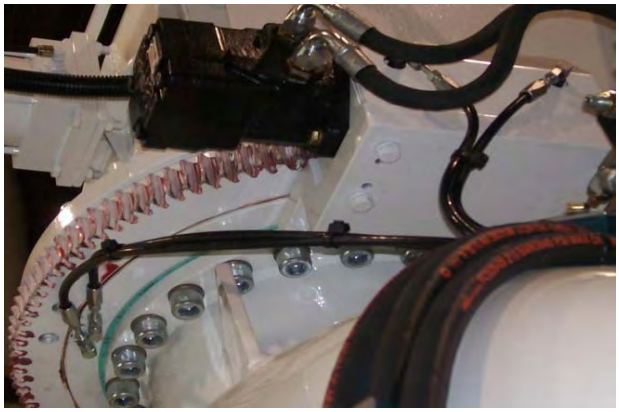

PARTS FOR REMOTE GREASE SYSTEM

 1/8"MNPT Grease Zerk **A381532-1**	 6mm Compression x 1/8"MNPT 90° Steel Adapter **A381532-2**	 6mm Compression x 1/8"MNPT Steel Adapter **A381532-3**
 6mm Compression x 1/8"MNPT Brass Adapter **A381532-8**	 6mm Compression Steel Union **A381532-5**	 Grease Hose **A381532-6**
 Reusable Hose End to 6mm Tube **A381532-7**	 1/8"FNPT to 1/4"-28 Straight Steel Adapter **A383051-P**	 1/8"BSPM x 1/8"FNPT 90° Steel Adapter **A381532-4**
 1/8"NPT Plated Brass Street Tee **A132815**	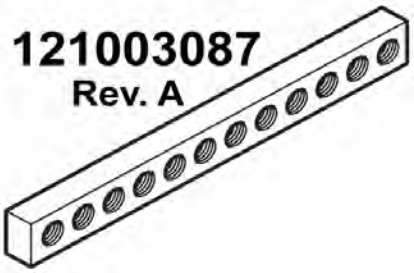 Weld Bar	 Dual Coupler Worm Gear Bracket **A384693**

B-SERIES STANDARD UNIT LUBRICATION POINTS INTERVALS						
Item #	Item Description	# Points	Inspect	Interval	Qty.	Lubricant
1&2	BOOM LIFT CYLINDER	2	MONTHLY	100 HOURS	1-2 SHOTS	LITHIUM #2 SHORT FIBER
3&4	BOOM PIVOT	2	MONTHLY	100 HOURS	1-2 SHOTS	LITHIUM #2 SHORT FIBER
5	BOOM WORM GEAR	2	MONTHLY	100 HOURS	1-2 SHOTS	LITHIUM #2 SHORT FIBER
6	BOOM BEARING	2	MONTHLY	100 HOURS	1-2 SHOTS	LITHIUM #2 SHORT FIBER
7&8	BOOM EXTENSION	2	MONTHLY	100 HOURS	1-2 SHOTS	LITHIUM #2 SHORT FIBER
9	REAR DOOR CYLINDER	1	MONTHLY	100 HOURS	1-2 SHOTS	LITHIUM #2 SHORT FIBER
10&11	REAR DOOR PIVOT	2	MONTHLY	100 HOURS	1-2 SHOTS	LITHIUM #2 SHORT FIBER
12	REAR DOOR BLOCK	1	MONTHLY	100 HOURS	1-2 SHOTS	LITHIUM #2 SHORT FIBER
13	BOOM EXTENSION ARMS	2	MONTHLY	WEEKLY	COAT LIGHTLY	LITHIUM #2 SHORT FIBER
14	BOOM TURRET GEAR	1	MONTHLY	WEEKLY	COAT LIGHTLY	LITHIUM #2 SHORT FIBER
15	VACUUM TUBE O-RINGS (AQUATECH STYLE TUBE)	1	MONTHLY	WEEKLY	COAT LIGHTLY	LITHIUM #2 SHORT FIBER
16	TIPPING CYLINDER PINS	2	MONTHLY	100 HOURS	1-2 SHOTS	LITHIUM #2 SHORT FIBER
17	EXHAUSTER DRIVE LEG BEARINGS	2	MONTHLY	100 HOURS	1-2 SHOTS	LITHIUM #2 SHORT FIBER
18	REEL BEARING	1	MONTHLY	100 HOURS	1-2 SHOTS	LITHIUM #2 SHORT FIBER
19	REEL CHAIN	1	MONTHLY	WEEKLY	COAT LIGHTLY	LITHIUM #2 SHORT FIBER
20	REEL SWIVEL BEARING	1	MONTHLY	100 HOURS	1-2 SHOTS	LITHIUM #2 SHORT FIBER
21	WATER PUMP DRIVE LEG BEARINGS	2	MONTHLY	100 HOURS	1-2 SHOTS	LITHIUM #2 SHORT FIBER
22	DEBRIS TANK PIVOT PINS	2	MONTHLY	100 HOURS	1-2 SHOTS	LITHIUM #2 SHORT FIBER
23	REEL PIVOT ARM	2	MONTHLY	100 HOURS	1-2 SHOTS	LITHIUM #2 SHORT FIBER
24	LEVEL WIND PIVOT ARM	1	MONTHLY	100 HOURS	1-2 SHOTS	LITHIUM #2 SHORT FIBER
25	REAR DOOR LOCK WEDGES	4	MONTHLY	100 HOURS	1-2 SHOTS	LITHIUM #2 SHORT FIBER